Air Excellent AE48C - AE55SC Horizontal Bend Adaptor Kit

Article number: 189038

Product overview

The AE48C - AE55SC Horizontal Bend Adaptor Kit seamlessly connects an AE48C duct with an AE55SC duct making it possible to create a horizontal 90° bend in your system, ensuring a quick, secure and tool-free installation. Includes one AE48C Click-Seal Ring and one AE55SC Seal Ring.

- Airtight connections for reliable system performance
- Low pressure loss to reduce fan energy use
- Quick, tool-free installation
- Lightweight design for easy handling
- TÜV SÜD-certified for quality and safety



Product dimensions

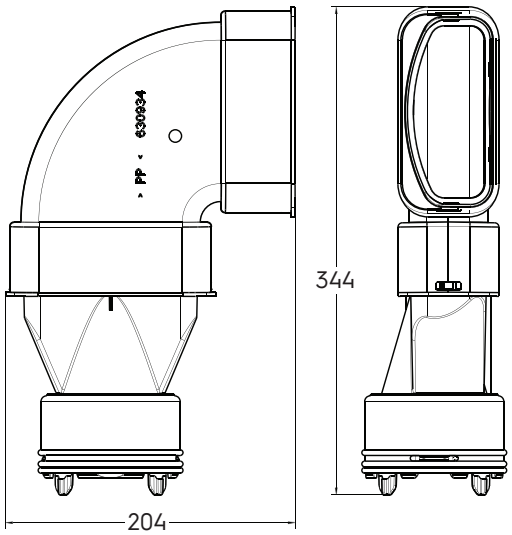

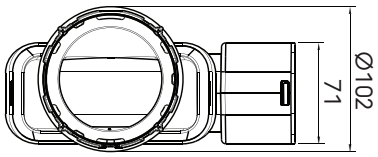

Technical specifications

Technical	
Colour	Green
Anti static	☑
Antimicrobial	☑

© 2026 Ubbink. All rights reserved.| Content is subject to change without notice. Availability and configurations may differ per country. | UB-23-11-2026-UK-EN

Air Excellent AE48C - AE55SC Horizontal Bend Adaptor Kit

Article number: 189038

ubbink
Build smart.

Technical specifications (continuation)

Technical	
Outer height	60 mm
Outer width	130 mm
Performance	
Insulation performance	NaN
Temperature resistance (min.)	-20 °C
Temperature resistance (max.)	60 °C
Reaction to fire: Euro class	E
Zeta supply 1 connection	NaN
Zeta extract 1 connection	NaN
Dimensions	
Length gross	344 mm
Width	204 mm
Height	102 mm
Net weight	0.146 kg

© 2026 Ubbink. All rights reserved.| Content is subject to change without notice. Availability and configurations may differ per country. | UB-23-11-2026-UK-EN